SPECIFICATION DATA

Type		MP 125
Displacement, cm³/rev [in³/rev]		123,8 [7.55]
Max. Speed, [RPM]	Cont.	486
	Int.*	605
Max. Torque daNm [lb-in]	Cont.	23,7 [2100]
	Int.*	29,8 [2640]
	Peak**	36,5 [3235]
Max. Output kW [HP]	Cont.	10,2 [13.7]
	Int.*	12 [16.1]
Max. Pressure Drop bar [PSI]	Cont.	140 [2030]
	Int.*	175 [2540]
	Peak**	225 [3260]
Max. Oil Flow lpm [GPM]	Cont.	60 [15.9]
	Int.*	75 [19.8]
Max. Inlet Pressure bar [PSI]	Cont.	175 [2540]
	Int.*	200 [2900]
	Peak**	225 [3260]
Max. Return Pressure with Drain Line bar [PSI]	Cont.	175 [2540]
	Int.*	200 [2900]
	Peak**	225 [3260]
Max. Starting Pressure with Unloaded Shaft, bar [PSI]		9 [131]
Min. Starting Torque daNm [lb-in]	At max.press. drop Cont.	20,7 [1830]
	At max.press. drop Int.*	26,6 [2360]
Min. Speed***, [RPM]		10
Weight, kg [lb] For rear ports +0,450 [.992]	MP(F)(N)	6,2 [13.7]
	MPW(N)	5,9 [13]
	MPQ(N)	5,6 [12.3]

MP 125

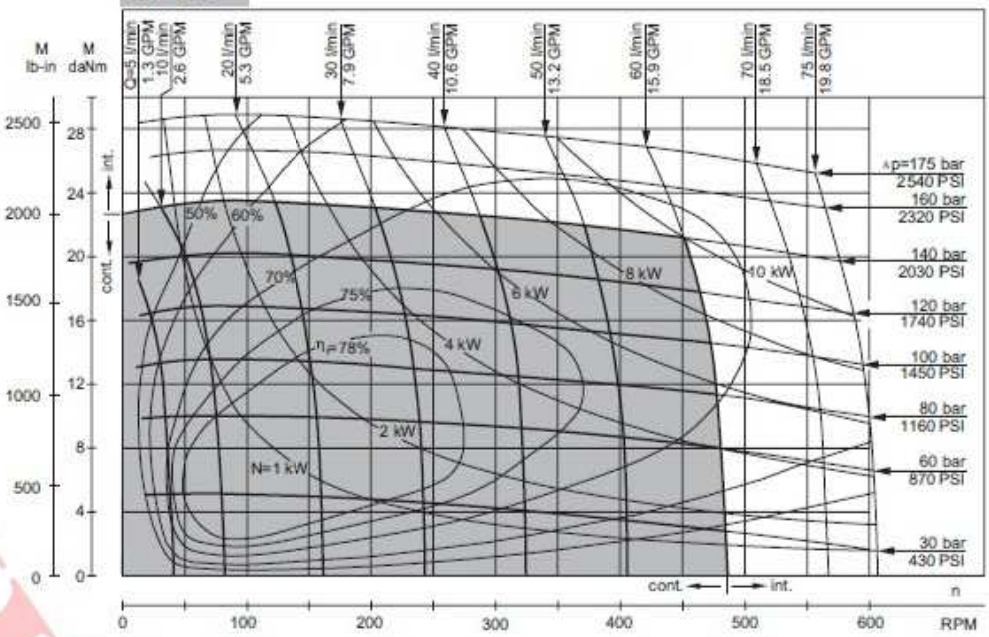

Type	L, mm [in]
MP(F) 125	145,5 [5.73]

DIMENSIONS AND MOUNTING DATA

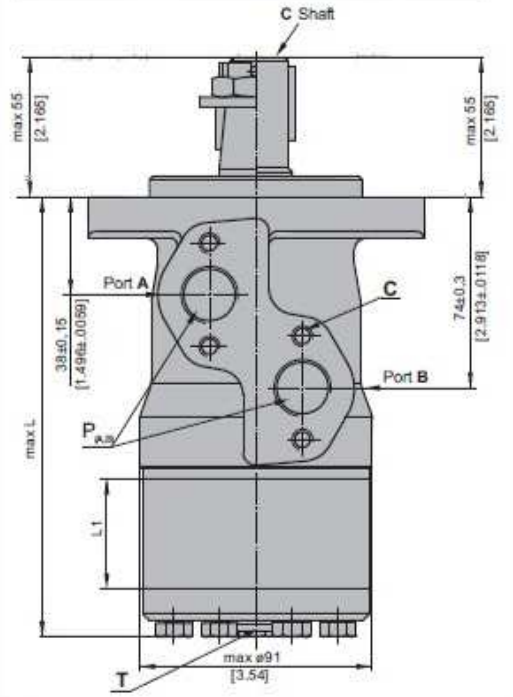

C - ø25 straight, Parallel key A8x7x32 DIN 6885
Max. Torque 34 daNm [3010 lb-in]

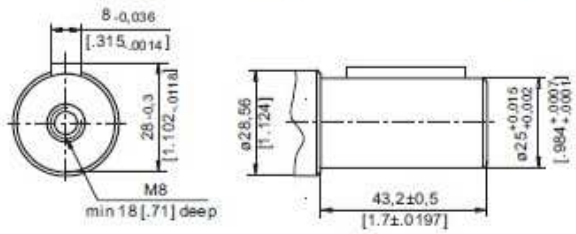

Oval Mount (2 Holes)

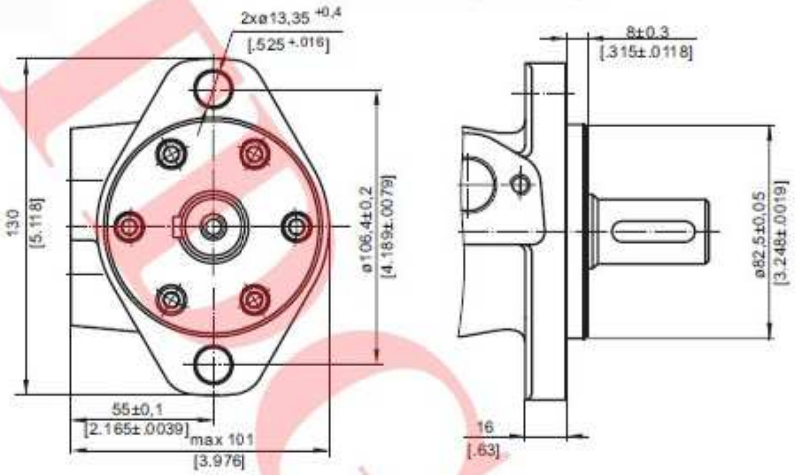

Side Ports

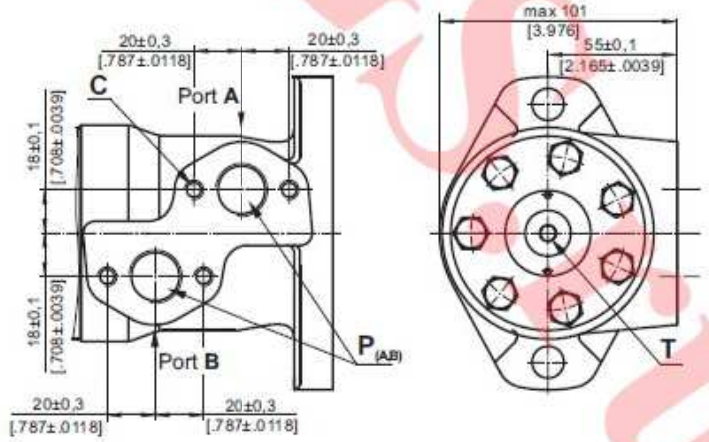

C : 4xM8 - 13 mm [.51 in] depth
P(A, B): 2xG1/2 or 2xM22x1,5 - 15 mm [.59 in] depth
T : G1/4 or M14x1,5 - 12 mm [.47 in] depth (plugged)

www.hydrogeu